10Gb/s High Sensitivity Coplanar PIN Preamp Receiver

PT10XGC

Features:

- High sensitivity, -20.5dBm typical
- Surface mount MSA compliant
- Low capacitance high speed InGaAs PIN detector
- Hermetically sealed
- Designed to exceed the requirements of Bellcore GR468_CORE
- Single mode fibre tail
- Compatible with AT10GC APD Receiver
- Output stage limits at 400mVp-p differential eliminating the need for a post amplifier
- Low Power Consumption, only 235mW
- RoHS 5/6 compliant

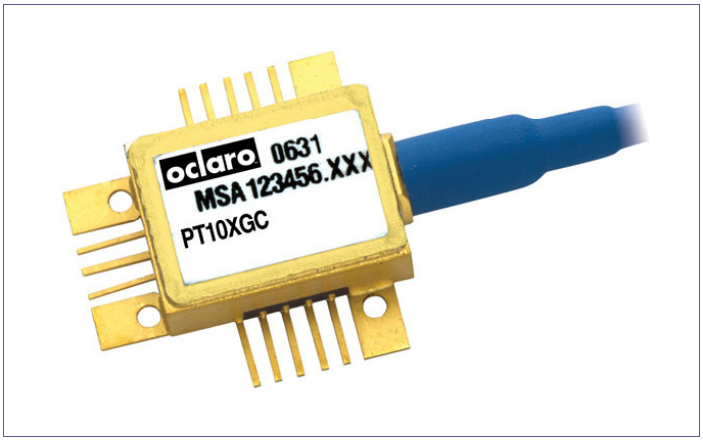

The module consists of a PIN photodetector, a low noise preamplifier, a connectorized single-mode fibre pigtail and a hermetic metal package with coplanar output. Optimized for use in 10 Gb/s long haul applications, either as a discrete device or within a transponder, using NRZ Modulation.

Operating Characteristics

Case Temperature = 25°C unless otherwise specified

Parameter	Symbol	Min	Typ	Max	Unit
Optical sensitivity 2^{31}-1 BER <10^{-12} [4]	Sens		-20.5	-19	dBm
Optical overload 2^{31}-1 BER <10^{-12}	P_{sat}	+1			dBm
High frequency -3 dB corner [2]	F_{3dB}	8	9		GHz
Return loss S_{22} (400 KHz to 7 GHz)				-8	dB
PiN bias voltage	V_{PD}		5		V
Dark current	I_{PD}			10	nA
PIN responsivity [1]	R	0.7	0.8		A/W
Amplifier bias voltage	V_{EE}		-5.2		V
Amplifier current consumption	I_{EE}		45		mA
Transimpedance gain [2] [3] [5]	T_Z	1600	2200	3400	Ohms

Notes:
[1] Optical Wavelength between 1525nm-1575nm.
[2] Load impedance is 50Ω (AC coupled) with a return loss >20 dB, up to 20 GHz.
[3] Excludes PIN responsivity.
[4] Measured with 10 Gb/s NRZ PRBS data and no FEC.
[5] Differential.

Absolute Ratings

Parameter	Symbol	Min	Max	Unit
Amplifier bias voltage	V_{EE}	-6	0	V
Operating temperature [1]	T_{op}	-40	85	°C
Storage temperature [2]	T_{stg}	-40	85	°C
Optical input [3]	P_{in}		10	dBm
Fibre bend radius		35		mm
Maximum PIN bias voltage	V_{PD}		+7.5	V

Notes (Absolute Ratings):
[1] The operating temperature is defined as the temperature of the module case.
[2] The rating is referred to ambient temperature.
[3] The optical level that causes no damage to the module. However, the electrical and optical performance specified in this document may not be guaranteed.

Class 2 ESD precautions must be observed when handling these devices.

Pin Out

Pin #	Symbol	Parameter	Pin #	Symbol	Parameter
1	GND	Case ground	10	Out_P	Positive output
2	V_{PD}	PIN bias voltage	11	GND	Case ground
3	NC	No connection	12	GND	Case ground
4	V_{EE}	Amplifier Bias	13	FBIN	No connection
5	NC	No connection	14	NC	No connection
6	GND	Case ground	15	NC	No connection
7	GND	Case ground	16	NC	No connection
8	Out_N	Negative output	17	GND	Case ground
9	GND	Case ground			

Typical Performance Characteristics

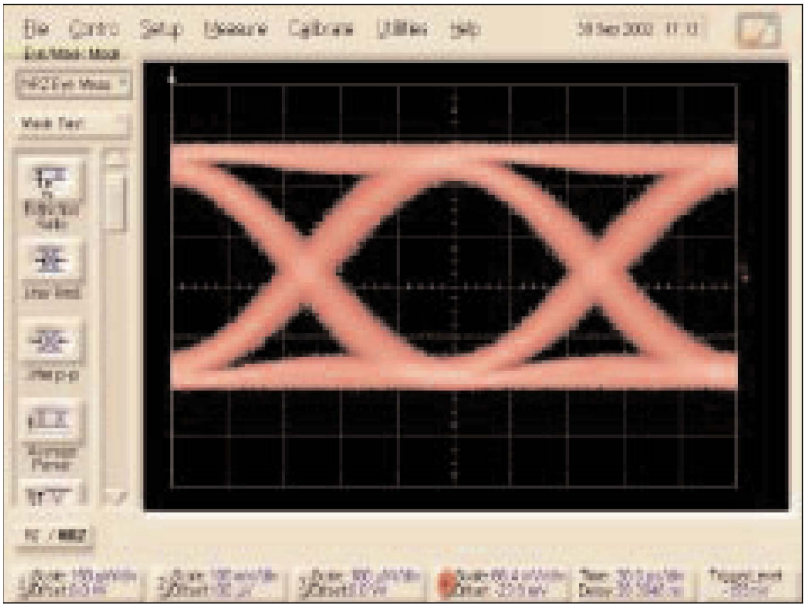

Figure [1]: Typical eye diagram measured at 10 Gb/s with NRZ data

Circuit Schematic

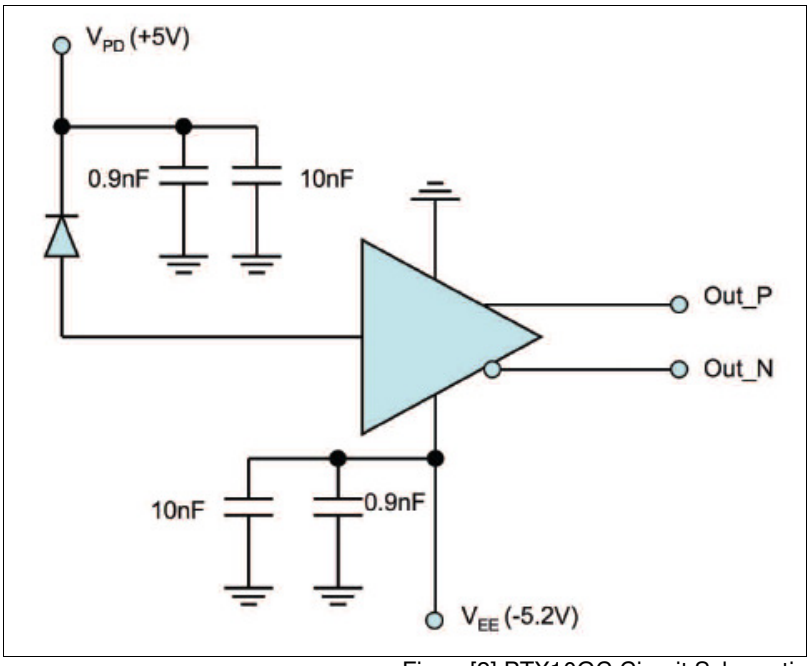

Figure[2] PTX10GC Circuit Schematic

Outline Drawing

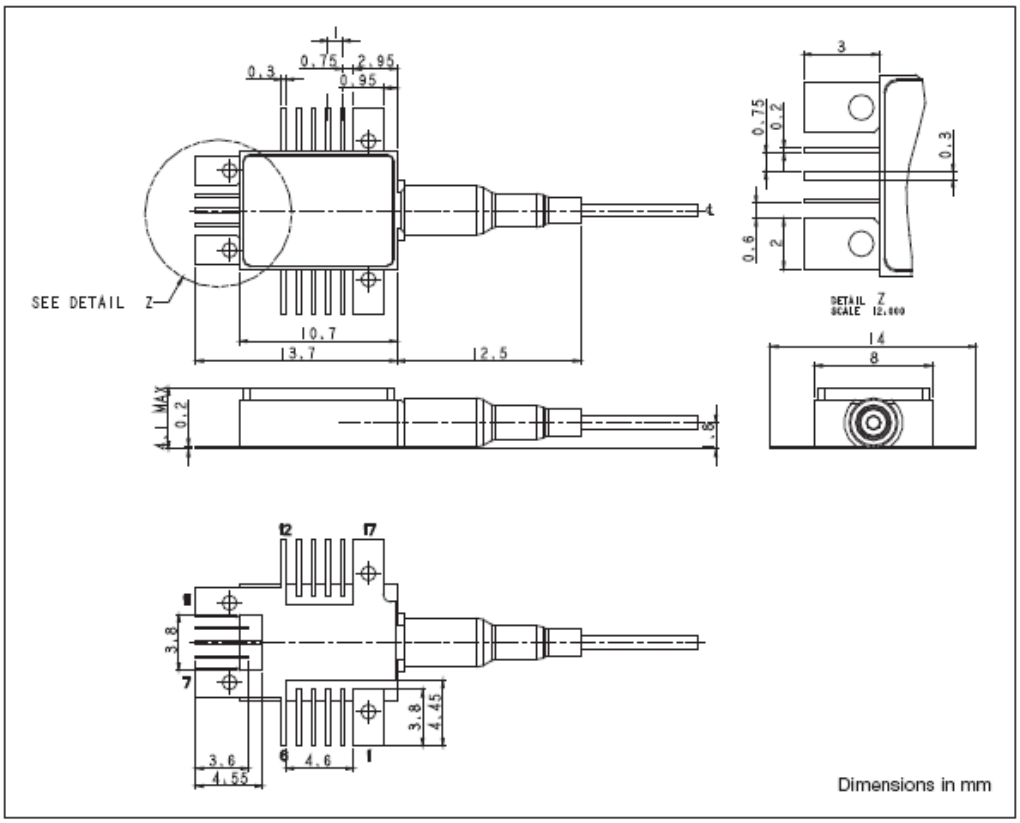

Figure[3] Outline diagram (Illustration only. For full details, refer to appropriate assembly drawing).
Note: Fibre is 900mm secondary coated single-mode fibre, length = 1200 +0/-200mm.

RoHS Compliance

Oclaro is fully committed to environment protection and sustainable development and has set in place a comprehensive program for removing polluting and hazardous substances from all of its products. The relevant evidence of RoHS compliance is held as part of our controlled documentation for each of our compliant products. RoHS compliance parts are available to order, please refer to the ordering information section for further details.

Ordering Information:

PT10XGC – (Connector)
J = SC/PC
J57 = LC
e.g. PT10XGC-J is an PT10XGC with an SC/PC connector.
Other options available on request

Contact Information

www.oclaro.com

Important Notice

Performance figures, data and any illustrative material provided in this data sheet are typical and must be specifically confirmed in writing by Oclaro before they become applicable to any particular order or contract. In accordance with the Oclaro policy of continuous improvement specifications may change without notice. The publication of information in this data sheet does not imply freedom from patent or other protective rights of Oclaro or others. Further details are available from any Oclaro sales representative.

ISO14001:1996 EMS 504193
TL9000 Rev 3.0 (ISO9001:2000)
FM15040

CAUTION
STATIC SENSITIVE DEVICE
OBSERVE PRECAUTIONS

D00046-PB Issue 04 November 2009
©Oclaro 2009. Oclaro the Oclaro, Inc. logo, and all other Oclaro, Inc product names and slogans are trademarks or registered trademarks of Oclaro, Inc. in the U.S.A. or other countries. Products described in this datasheet may be covered by one or more patents in the U.S.A. and abroad. Information in this datasheet is subject to change without notice.